A New Global Positioning System Drifter Buoy

Ronald W. Muzzi and Michael J. McCormick

Great Lakes Environmental Research Laboratory
National Oceanic and Atmospheric Administration
2205 Commonwealth Blvd.
Ann Arbor, Michigan 48105
USA

Abstract **- A low cost GPS (Global Positioning System) drifter buoy platform has been developed to greatly improve Lagrangian current measurements. The GPS drifter has provided improved spatial and temporal resolution over Argos drifters and its practical, lightweight housing allows easier handling than Loran drifters. A simple differential technique was used to improve accuracy and overcome the intentional downgrading that is imposed on GPS by the use of Selective Availability. The drifters also feature a thermistor chain that obtains temperature profiles immediately below the surface. Eleven of these drifters were built and successfully tested in Lake Huron. The differential accuracy was determined experimentally to be on the order of 15 meters.**

I. INTRODUCTION

Drifter buoys are useful tools for studying circulation in remote regions and in shallow waters where moored current meters may not be practical. Concern over the spread and impact of zebra mussels in the Great Lakes region lead to a multi-year program to study the biology, chemistry, and physics of Saginaw Bay and Lake Huron. To aid the circulation portion of this study we planned an intensive use of drifter buoys. These instruments have been used to study mixing and circulation processes in much of the Great Lakes [1-5].

It was decided to develop a new drifter buoy because of the limitations of Argos and Loran drifters. Argos satellite-tracked drifters, which are readily available and in common use, do not provide the resolution needed for this study. Argos is limited to a position accuracy of about +/- 300 m [6], and, at the latitude of the Great Lakes, to an average of only 11 positions per day [7] which are not uniform in time. While Loran drifters do provide the desired accuracy and uniform spacing of measurements, they are typically bulky and difficult to handle, in part because of the large whip antenna that is required [8]. GPS (Global Positioning System) was chosen for the primary position measurement system because it provides the accuracy needed, can be used anywhere in the world without modification, and uses a small antenna. The small antenna allows a compact and lightweight drifter to be built. The cost of a GPS receiver is comparable to that of a Loran receiver.

II. DESIGN GOALS

At the time we decided to use GPS drifters, we were not aware of any manufacturer who was producing a low-cost GPS drifter, so we decided to design and build them in-house. Our design criteria were:

- Data storage in solid-state memory.
- Program and data access via external RS-232C port.
- External power on/off control.
- Extended deployment life.
- Easily replaced, commercially available batteries.
- Battery and electronics in separate water-tight housings.
- Easily handled by one person, i.e., lightweight and not bulky or have large extrusions.
- Square housing so as not to roll on deck.
- Plastic construction material instead of metal.

For the most part, we were able to satisfactorily meet these criteria with one major exception: the battery pack and separate housing. We were concerned that standard battery cells would have contact problems in rough field conditions, therefore, we chose alkaline lantern batteries with screw tops that could be securely wired. We also did not separate the battery and electronics housings because the expense did not seem to justify the small advantage that would be gained.

We were able to build 11 GPS drifters and successfully test them in Saginaw Bay.

III. GPS OPERATION

GPS uses a constellation of 24 satellites orbiting the earth every 12 hours at an altitude of 2×10^7 m that transmit in the L-band using spread-spectrum modulation [9]. A GPS receiver needs to lock on to three of these satellites for a 2-dimensional position fix or four satellites for a 3-dimensional position fix. Some GPS receivers use more satellites for improved position information. Horizontal position accuracy of GPS is commonly defined in terms of

0-7803-2056-5 © 1994 IEEE
U.S. Government work no protect by U.S. Copyright

$2d_{rms}$ (2-dimensional root-mean-square). It is calculated as follows [10]:

$$2d_{rms} = 2\sqrt{\sigma_x^2 + \sigma_y^2}$$

GPS has a position accuracy on the order of 20-30 m $2d_{rms}$ without SA (Selective Availability). The position accuracy of GPS with SA is on the order of 100 m $2d_{rms}$ [9]. SA is the intentional position degradation that is imposed on GPS by the Department of the Defense for national security reasons. GPS is currently operated with SA active.

The magnitude of error imposed by SA is excessive for our purposes. The effects of SA, however, can be overcome by using GPS in a differential mode. Differential GPS not only overcomes the effects of SA, but reduces some other errors as well, resulting in accuracies better than 10 m $2d_{rms}$ [11]. To implement differential GPS, a reference station must be used with either a data link between the reference station and the drifters or the storage of data for post-processing. Due to the expense of a real-time data link we chose to post-process the data.

Differential corrections can be made to the drifter data only if both the reference station and the drifter are using the same set of satellites. We came up with a simple and reliable method to do this: because the orbits of the satellites are predictable, it is possible to program both the reference station and the drifters ahead of time to use the same satellites in their solution. For this differential technique to work, two additional factors must be considered. First, the position fixes of the reference station and the drifter must be synchronized in time. GPS readily accommodates this because each GPS fix not only provides position information, but time information as well. The drifters and reference station were thus not only synchronized to use the same satellites, but also to collect data at the same time. Second, the drifters and the reference station must use the same ephemeris data set for each satellite. (The ephemeris data set, downloaded from each satellite, contains the precise orbit information used in the position calculation.) The ephemeris data set is typically updated every hour. Each new ephemeris contains a unique IOD (issue of data) sequence code to indicate to the GPS receiver that it has been updated. This code is recorded and used to verify that both the reference station and the drifter are using the same ephemeris data set.

The data collection cycle was established to provide information for differential corrections and to minimize power consumption. We used a period of 15 minutes, but a data cycle rate of up to 5 minutes is possible. We averaged our position in latitude, longitude, and altitude over a 2-minute period. The GPS receiver outputs a position and GPS time of position about once per second. We included in our recording the IOD for each satellite ephemeris and the PDOP (position dilution of precision). (PDOP is a measure of the effect of the satellite geometry on the position accuracy. A lower PDOP indicates better accuracy. For example, if all the satellites are bunched together at one point in the sky, they will have a high PDOP. If the satellites are well-separated in the sky, they will have a low PDOP.) The drifter data collection cycle was as follows:

1. Wake up GPS receiver.
2. Program GPS receiver with satellite selection from table.
3. Wait 2 minutes for GPS receiver to lock on to satellites.
4. Capture and average latitude, longitude, and altitude for all position fixes that were determined during minutes 2 and 3 of the data cycle according to the GPS clock.
5. Keep capturing positions until minute 4 of the data cycle.
6. Get ephemeris IOD for each satellite.
7. Update data logger clock from GPS clock if valid.
8. Turn off GPS receiver.
9. Record time.
9. Record average latitude, longitude, and altitude and number of fixes used in the average.
10. Record IOD for each satellite.
11. Record PDOP.
12. Record GPS receiver status.
13. Record other sensor data, e.g., thermistors.

The reference corrections were applied by using the long-term average position as an estimate of the reference station's true position. Then, each data record was matched in time between the reference station and the drifter. The data record was discarded if the GPS receiver status was not satisfactory or if there were less than 30 position fixes in the average. The satellite PRN's (the pseudorandom noise code number is used to identify the satellite as they are unique to each satellite) and IOD's between the reference and drifter were compared, and the data record discarded if they were not identical. Data records with PDOP values greater than 10 were discarded because of their high error content. The reference station's true position was then subtracted from the reference station's reported position to give the position error for each data record. The differentially corrected drifter position was then generated by subtracting the position error from the raw drifter data.

IV. ELECTRONICS PACKAGE

An Onset TattleTale Model 2B Data Logger was used as the main controller and data logger for the drifter. The

logger is programmed in a customized BASIC. The program is burned into an EPROM chip. The data logger features 230 Kbytes of solid-state memory, 14 digital I/O lines, and an 8 channel, 12 bit A/D converter. A 5-pin underwater connector, type VSK-5-BCL, was mounted on the top of the drifter to allow communications with the data logger without opening the housing. In addition, this connector allows turning the drifter "on" and "off." When deployed, a "launch" plug is put on the communications connector. This shorts two of the pins to turn the drifter "on." The electronics senses this and begins data logging. When the connector is removed to turn the drifter "off," the data logger goes into a low-power mode that preserves the system memory.

A thermistor chain with 7 thermistors was constructed to provide a temperature profile at depths of 0 m, 0.25 m, 0.5 m, 0.75 m, 1 m, 2 m, and 3 m. The thermistor chain was suspended freely below the drifter. The thermistor chain was made from Yellow Springs Instruments no. 44033 thermistors spliced into an underwater cable and resealed with water-tight electrical putty and shrink tubing.

The Magellan 5-Channel OEM GPS Receiver was used to collect GPS position data. This features a small, 10.5 cm high, quadrifilar helix antenna with a semi-ellipsoid shape to it.

The ORE International Model 2120A Argos Transmitter was used to provide real-time monitoring of the drifter and to assist in its recovery. The Argos data message, consisting of the most recent GPS position fix, is transmitted from the drifter to satellite and is accessible in near real-time from the Argos data dissemination network. This allows ship recovery of the drifter and is not limited in range as an FM transmitter would be. Furthermore, if the GPS receiver fails, but the Argos transmitter does not, then the Argos determined position can be used to recover the buoy.

A beacon with a slow flashing light was mounted on the top of the housing to meet the Coast Guard requirements for scientific drift buoys in the Great Lakes.

A battery pack was made up from Duracell 6-volt alkaline lantern batteries with screw tops. Each pack consists of 12 lantern batteries in a series-parallel arrangement, isolated by diodes, to provide 18 volts initial operating voltage and about 80 ampere-hours of capacity. At a sample rate of once every 15 minutes, the battery packs were found to have an operational capacity of about 12 days.

V. MECHANICAL CONSTRUCTION

The drifter housing, as outlined in Figure 1, was constructed out of a 20-cm diameter x 97-cm high schedule 40 PVC pipe with a flotation collar around the top measuring 20-cm high by 33-cm diameter. The flotation collar was made of closed-cell foam sandwiched between two 33-cm square plates. The square plates prevent the drifter from rolling when placed on the deck of a ship. Although this is a simple and usually overlooked feature in marine instruments, it greatly adds to the ease and safety of the handling of the drifter. The semi-ellipsoid GPS antenna, the Argos whip antenna, the beacon lens, and a type VSK-5-BCL interface connector were mounted on top of the drifter. Below the drifter a 2-m by 3-m holey-sock drogue was suspended. This provided an air/water surface area ratio sufficiently low to minimize slippage concerns [2].

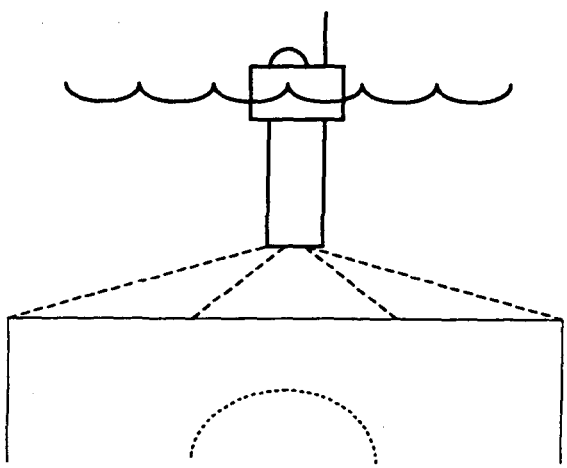

Fig. 1. General outline of GPS drifter buoy. GPS and Argos antennas are shown on top above flotation collar. The holey sock drogue is suspended from the bottom of the drifter.

The thermistor chain was also suspended below the drifter. The bottom bulkhead featured a type XSL-8-BCR connector for the thermistor chain. The bottom bulkhead was attached 30 cm above the bottom of the drifter tube. This allowed room for the thermistor connector and the drogue shackle attachment at the bottom of the drifter so that the drifter could stand upright when the drogue was disconnected. The battery pack was installed inside the housing. The electronics package was enclosed in metal boxes and directly attached to the top bulkhead.

VI ACCURACY TESTS

Some tests were done to estimate the accuracy of our drifters. A GPS receiver located in East Tawas, Michigan was used as a reference station, and a GPS receiver was located at our laboratory in Ann Arbor, Michigan. We also operated a Loran receiver and Argos transmitter at our laboratory to get some comparative data results. The distance between the two sites is 220 km. The long-term (several days) GPS position average was used to estimate each site's true location. Table 1 lists the test results.

	Position Error: 2drms meters	Testing Period: days	Number of Points:
Standard GPS	68.3	4.5	418
Differential GPS	15.5	4.5	346
Argos	419.2	8.2	10
Loran	78.6	4.5	425

Table 1. Test results of accuracy estimates. Excessive outliers were discarded from the data sets. The testing period is the time period over which the tests were conducted. The number of points is the number of position fixes used in the calculations.

VII FIELD TESTS

Several tests were conducted in the summers of 1992 and 1993 in Saginaw Bay in Lake Huron. Figure 2 shows two tracks from the final field tests of the GPS drifters. The drifters were released in the lakeside portion of Saginaw Bay on 25 July 1993. The drifters remained in the outer bay for several days until a storm system passed through the area and generated some strong southerly currents along the western Lake Huron shore.

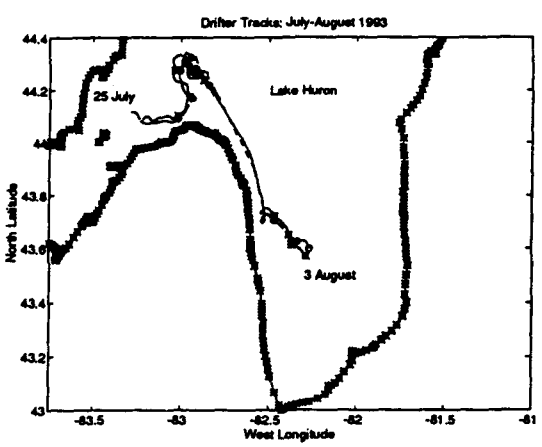

Figure 2. Tracks of two GPS drifters in Saginaw Bay and Lake Huron. Both the deployment and retrieval dates are shown.

We directly observed the drifters under varying wave conditions. When wave heights were near 1 m the drifters were frequently swamped yet it had no effect on their ability to fix their GPS positions nor transmit over Argos. However, as wave heights increased to 2 m and greater, swamping became a serious problem. Under these conditions the drifters remained submerged too long to fix either their GPS location or transmit long enough for an Argos position. As the wave heights decayed, the drifters once again became fully operational. This problem can be solved by adding more buoyancy to the flotation collar. However, care must be exercised when adding buoyancy so that it does not compromise the drifter's water-tracking ability.

ACKNOWLEDGMENTS

We thank Capt. William R. Burns of *R/V Cyclops*, John E. Grimes of NOAA, Robert T. Nachtrieb of MIT, and the staff of the Marine Instrumentation Laboratory of GLERL for all of their help. GLERL Contribution No. 915.

REFERENCES

[1] A. H. Clites. "Observations of concurrent drifting buoy and current meter measurements in Lake Michigan," *Journal of Great Lakes Research*, 15:197-204, 1989.

[2] M. J. McCormick, A. H. Clites, and J. E. Campbell. "Water-tracking ability of satellite-tracked drifters in light winds," *Marine Technology Society Journal*, 19(3):12-17, 1985.

[3] M. J. McCormick, R. L. Pickett, and G. S. Miller. "A field evaluation of new satellite-tracked buoys: a LORAN-C position recording and a sonobuoy type drifter," *Marine Technology Society Journal*, 25(2):29-33, 1991.

[4] C. R. Murthy, K. C. Miners, and J. E. Sandall. "Mixing characteristics of the Niagara plume in Lake Ontario," NWRI Contribution 86-82, 34 pp., National water Research Institute, Burlington, Ontario, 1987.

[5] D. J. Schwab, A. H. Clites, C. R. Murthy, J. E. Sandall, L. A. Meadows, and G. A. Meadows. "The effect of wind on transport and circulation in Lake St. Clair," *Journal Geophysical Research*, 94(C4):4947-4958, 1989.

[6] R. Pickett, R. Partridge, A. Clites, and J. Campbell. "Great Lakes satellite-tracked current drifters," *MTS/NDBC 1983 Symposium on Buoy Technology Proceedings*, New Orleans, p. 138-143, 1983.

[7] Service Argos. *Argos User Manual*. Landover, Maryland: Service Argos, 1988.

[8] G. Miller, R. Muzzi, J. Dungan, and J. Saylor. "Adding Loran-C position recording to a satellite-tracked drifter buoy," *Marine Technology Society Journal*, 23(3):36-38, 1989.

[9] J. Hurn. *GPS: A Guide to the Next Utility*. Sunnyvale, CA: Trimble Naviagtion, 1989.

[10] K.D. McDonald, "GPS accuracy considerations," *Navstar GPS for Engineers*, Arlington, Virginia: Navtech Seminars, 1991.

[11] A. Kleusberg, "Precise differential positioning and surverying," *GPS World*, p. 50-52, July 1992.

[12] R. Denaro, "Differential GPS concepts," *Navstar GPS for Engineers*, Arlington, Virginia: Navtech Seminars, 1991.

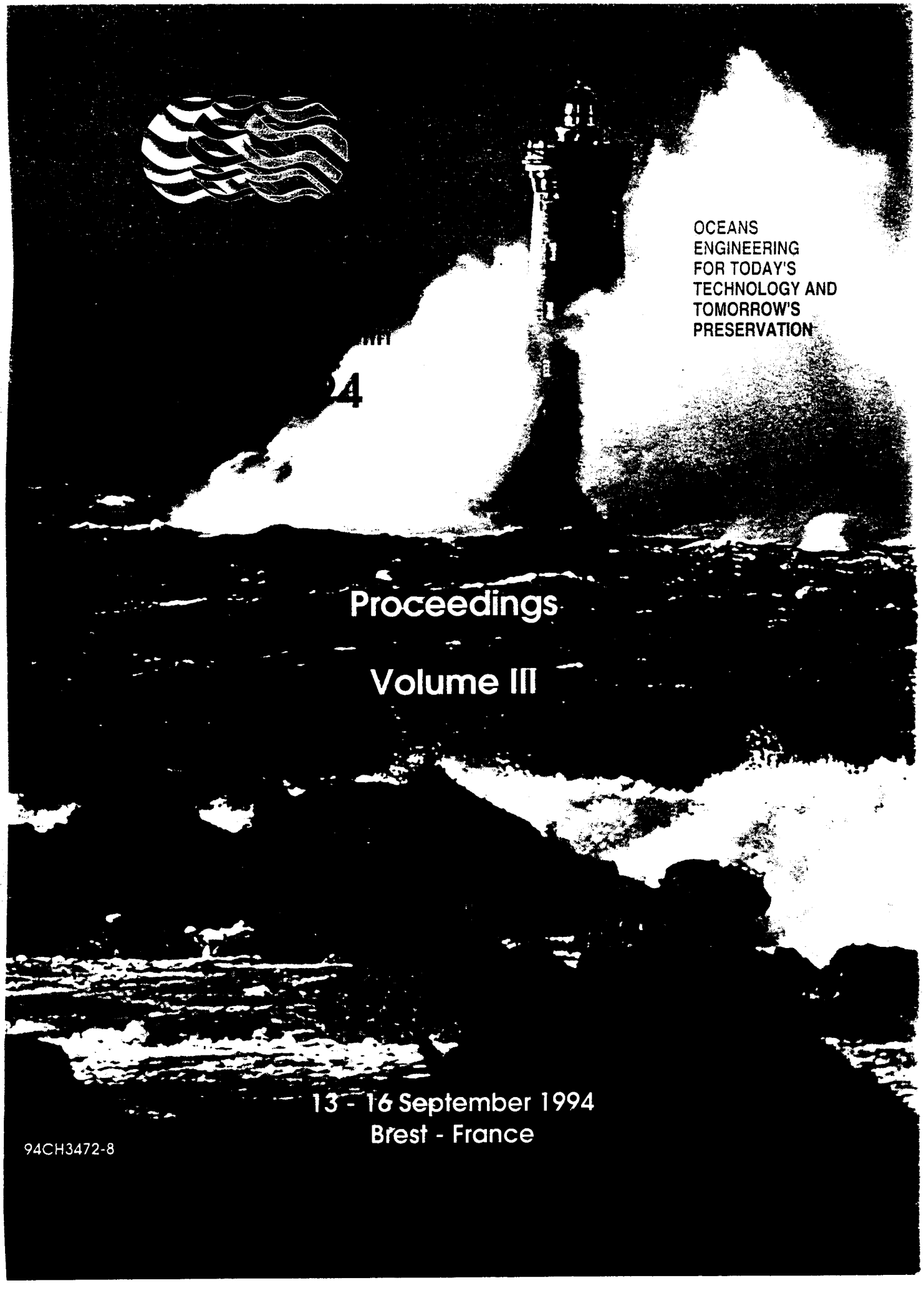

OCEANS
ENGINEERING
FOR TODAY'S
TECHNOLOGY AND
TOMORROW'S
PRESERVATION

Proceedings

Volume III

13 - 16 September 1994
Brest - France

94CH3472-8

1994 IEEE OCEANS

Abstract and Reprint Permissions: Abstracting is permitted with credit to the source. Libraries are permitted to photocopy beyond the limits of U.S. copyright law for private use of patrons those articles in this volume that carry a code at the bottom of the first page, provided the per-copy fee indicated in the code is paid through the Copyright Clearance Center, 29 Congress St, Salem, Ma 01971. Instructors are permitted to photocopy isolated articles for non-commercial classroom use without fee For other copying, reprint or republication permission, write to Director, Publishing Services, IEEE, 345 E. 47 St., New York, NY 100017. All rights reserved. Copyright ® 1994 by The Institute of Electrical and Electonics Engineers, Inc.

IEEE Catalog No. 94CH3472-8
ISBN: 0-7803-2056-5 Softbound Edition
0-7803-2057-3 Casebound Edition
0-7803-2058-1 Microfiche Edition
Library of Congress Catalog Card No. 94-77570

Additional copies may be ordered from:

IEEE Order Department
445 Hoes Lane
Piscataway, NJ 08854 - USA

SEE
48, rue de la Procession
75724 Paris Cedex 15 - FRANCE

IFREMER
Service des Éditions Scientifiques et Techniques
BP 70
29280 Plouzané - FRANCE

Printed in FRANCE by Cloître - ST THONAN