LIMNOLOGY
AND
OCEANOGRAPHY

September 1981
Volume 26
Number 5

Limnol. Oceanogr., 26(5), 1981, 801–810

Kinetic examination of nitrogen release by zooplankters[1]

Wayne S. Gardner and Donald Scavia
National Oceanic and Atmospheric Administration, Great Lakes Environmental Research Laboratory, 2300 Washtenaw Avenue, Ann Arbor, Michigan 48104

Abstract

Kinetics of nitrogen release by *Daphnia magna* (0.2–0.4 mg dry wt) and *Daphnia pulex* (ca. 0.03 mg dry wt) were followed by measuring ammonium (plus primary amines) in water flowing past individual animals. Culture media water was pumped slowly (6 $ml \cdot h^{-1}$) through an incubation chamber (volume 0.05 ml) containing a daphnid and then either mixed with *o*-phthalaldehyde reagent for continuous analysis of nitrogen compounds or passed into a sample loop of an ammonium analyzer for measurements of ammonium release at discrete intervals. Within the resolution of the technique (3 min), nutrient regeneration appeared continuous rather than pulsed. Highest rates of ammonium release, 44 $nmol \cdot (mg\ dry\ wt)^{-1} \cdot h^{-1}$ (SE = 5, N = 8), were typically observed immediately after the animals were removed from food. Regeneration rates for *D. magna* gradually decreased during the first hour to a mean steady state rate of 11 $nmol \cdot (mg\ dry\ wt)^{-1} \cdot h^{-1}$ (SE = 2, N = 8).

The release of nitrogen and phosphorus by zooplankton provides nutrients for phytoplankton in marine and freshwaters. Many investigators have measured nitrogen and phosphorus release in laboratory and field experiments, but the kinetics of nutrient release are not yet well defined. For example, it is not clear whether zooplankters release nutrients in pulses or continuously. This is important in estimating the persistence of concentrated nutrient patches which may be microenvironments for enhanced nutrient uptake by phytoplankton (cf. Goldman et al. 1979; Lehman 1980).

Factors controlling rates of nutrient release are also not well defined. Although recently fed animals release nitrogen and phosphorus at higher rates than unfed ones (Corner et al. 1965; Hargrave and Geen 1968; Marshall and Orr 1961; Conover and Mayzaud 1976), the extent to which food quantity and quality affect nutrient release has been masked by previous experimental designs. For example, because phytoplankton, added as food, assimilate nutrients released by the animals before the increased nutrient concentrations can be measured, investigators have incubated animals without food before measuring nutrient accumulation. Also, because relatively large incubation chambers were used, experiments have often been run for more than 12 h to accumulate sufficient nutrients for measurement. The shortest incubation times have been about 2 h. The retention time of food in the animal's gut is long (>1 h) in the absence of an external food source (Schindler 1968; Geller 1975; Lampert 1977), and food in the gut is partly digested during the experiment. Thus, nutrient release rates obtained

[1] GLERL Contribution 244.

from these experiments actually are representative of only partially nourished animals.

One can measure nutrient release from zooplankton in the presence of phytoplankton by correcting the apparent excretion rate for nutrients taken up by phytoplankton. This can be done either by estimating uptake during an experiment from Michaelis-Menten kinetics and known characteristics (V_{max}, K_s) of the phytoplankton (Takahashi and Ikeda 1975) or by adding enough nutrients to saturate the phytoplankton uptake response (resulting in a constant uptake rate) and observing net rates of change in nutrient concentrations as a function of zooplankton abundance (Lehman 1980). These methods measure total nutrient regeneration and are valuable for determining the contributions of zooplankton to the total supply of nutrients for phytoplankton and the overall regeneration rates of field populations. Nutrient release in those experiments may include zooplankton release by excretion, egestion, molting, food cell damage during feeding, and also release from epizoa.

Mechanisms controlling regeneration can be better defined and quantified if the release processes are measured separately. Zooplankton phosphorus release via excretion and molting, and the associated epizoic release, have been measured by radiotracer methods (Peters and Rigler 1973). Here we describe and use an approach to measure the release of ammonium immediately after *Daphnia magna* and *Daphnia pulex* are separated from their food. The release of nutrients due to cell damage is eliminated and occasional abnormal release rates caused by animal injury, molting, or death can be rejected because the animals are used individually. Relatively short incubations (10 min), performed sequentially, allow the estimation of release from a readily exchangeable pool and suggest effects of deterioration of the food in the animal's gut.

We thank A. Robertson for suggestions during the study, D. R. Slavens for technical assistance, T. F. Nalepa and M. A. Quigley for help with the *Daphnia* cultures, and J. T. Lehman, S. J. Tarapchak, and H. L. Vanderploeg for reading the manuscript. We also thank R. H. Peters for criticizing the manuscript during review.

Methods

We developed two methods to examine nitrogen release by individual zooplankters. Both were designed around an incubation flow cell interfaced with high-performance liquid chromatographic components. Method A provides continuous monitoring of *o*-phthalaldehyde (OPA) reactive nitrogen (PRN: ammonium plus primary amines) released by the animal and was used to examine nitrogen release kinetics. In method B the flow cell is interfaced with the injection loop of an ammonium analyzer (Gardner 1978) to measure ammonium separately from primary amines and to provide quantitative measurements of ammonium release by fed and unfed animals.

Incubation flow cell—An incubation flow cell with adjustable volume was made by modifying a 0.5-ml plastic syringe (B-D Plastipac Lo-dose insulin syringe: Fig. 1). Teflon tubing (30 gauge), inserted through the pliable tip of the plunger (with an oversized needle, which was then removed), served as an inlet to the cell. A frit (from a Waters Sep Pac column) was trimmed to fit the syringe barrel and placed in the outlet end of the barrel to enhance uniform liquid flow over the cross section of the incubation cell. The insulin needle point was removed from its base and the hole in the plastic base resized with a 23-gauge needle. Standard wall (30 gauge) Teflon tubing was stretched, cut, and pulled through the hole to form a tight seal and then cut off to form a relatively low dead-volume outlet connection to the syringe barrel. We selected a cell of 0.05 ml (ca. 4-mm i.d. × 5 mm long) to keep the cell small and well mixed, but still maintain the zooplankter in a relatively normal physical state. There was enough room for the animal to move but dissolved components could be cleared from the cell in about 3 min (flow rate of 0.1 $ml \cdot min^{-1}$). Flow of medium past the animal prevented buildup of metabolic by-products. The cell was designed to minimize stress to the animal during transfer; all transfers were done with the animal moving actively in water from the preconditioning tank. A test animal was drawn into the disassembled incubation cell by suction from a second, larger syringe attached to the outlet end with short rubber tubing. While the flow cell was disconnected, fittings to the valve were placed in a vial of distilled water to pre-

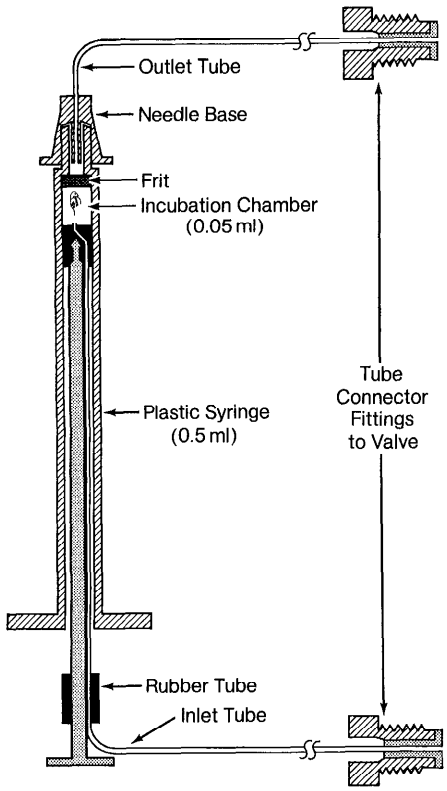

Fig. 1. Schematic of incubation flow cell.

vent air from entering the tubes and to allow the incubation chamber to be assembled without exerting pressure on the animal. Open fittings were held always in the lower siphon position. The incubation cell was assembled for use by inserting the plunger (containing the inlet tube) into the barrel and adjusting the cell volume to 0.05 ml. The outlet tube was connected to the barrel, and inlet and outlet fittings were attached to the valve.

Apparatus to continuously measure PRN release: Method A—We used a continuous flow system, assembled from high-performance liquid chromatography components (Fig. 2) to measure kinetics of nitrogen release. Low-nutrient medium, containing 20 mg $CaCl_2 \cdot 2H_2O$, 10 mg $MgSO_4$, and 20 mg $NaHCO_3$ per liter of distilled water (Lehman 1980), was pumped through the system at a flow rate of 0.1 $ml \cdot min^{-1}$ with a Beckman model 100A pump. Teflon tubing with low dead-volume fittings (Altex tube end fittings with Aminco small tube adapters) connected the various components. Small-bore (30-gauge standard wall) Teflon tubing between the incubation cell and the fluorometer minimized sample mixing during passage through the system. A large (13-gauge, 8-ml vol) Teflon tube between the pump and sample valve dampened detector response to minor pump pulses. A sample injection valve (Altex) diverted liquid flow from the incubation cell to a sample loop (0.4-ml vol in 30-gauge Teflon tubing). The loop served as a blank monitor and was loaded with freshly diluted standard ammonium solution to quantify experimental results.

OPA reagent was mixed continously with the sampling valve effluent to form fluorescent derivatives of PRN in the sample, blank, or standard solution passing through the system (Gardner 1978). OPA reagent was prepared as previously described for amino acid analysis (Hare 1975). Boric acid (15 g) was added to distilled water and the pH adjusted to 9.5 with KOH. In a separate container, 0.25 g of OPA (Sigma Chem. Co.) was dissolved in 5 ml of ethanol and mixed with 0.25 ml of mercaptoethanol. The solutions were mixed and diluted to 500 ml. OPA reagent was stable for 5 days at room temperature.

Fluorescence was measured with a fluorometer (Gilson Spectra/Glo) equipped with a flow-through cell and filters appropriate for OPA derivatives (excitation 340 nm; emission 455 nm). Fluorescent response was recorded against time to provide a continuous record of PRN concentration in the outflowing water.

Release rate measurements: Continuous method A—To begin an experiment, we warmed up the fluorometer, started pump flow (0.1 $ml \cdot min^{-1}$), and adjusted reagent reservoir pressure to provide a reagent flow of ca. 0.05 $ml \cdot min^{-1}$. With water flow directed through the standard injection loop, we removed the incubation cell and placed the test animal in the incubation flow cell.

When we connected the incubation flow cell to the injection valve and directed water flow through the chamber, we observed an initial fluorescent peak resulting from PRN in the original preconditioning water (Fig. 3). After the cell was flushed with culture medium water, the constant flow past the daphnid provided continuous monitoring of PRN release by the animal. We checked baseline stability and position during an experiment by directing flow through the sample loop. When the valve was switched back to the incubation cell, we observed an initial peak representing accumulated PRN, which we followed by continuous monitoring of nitrogen release. The width of the cumulative peak represented the time required to sweep nitrogen compounds from the incubation chamber and, therefore, estimated the temporal resolution of the method.

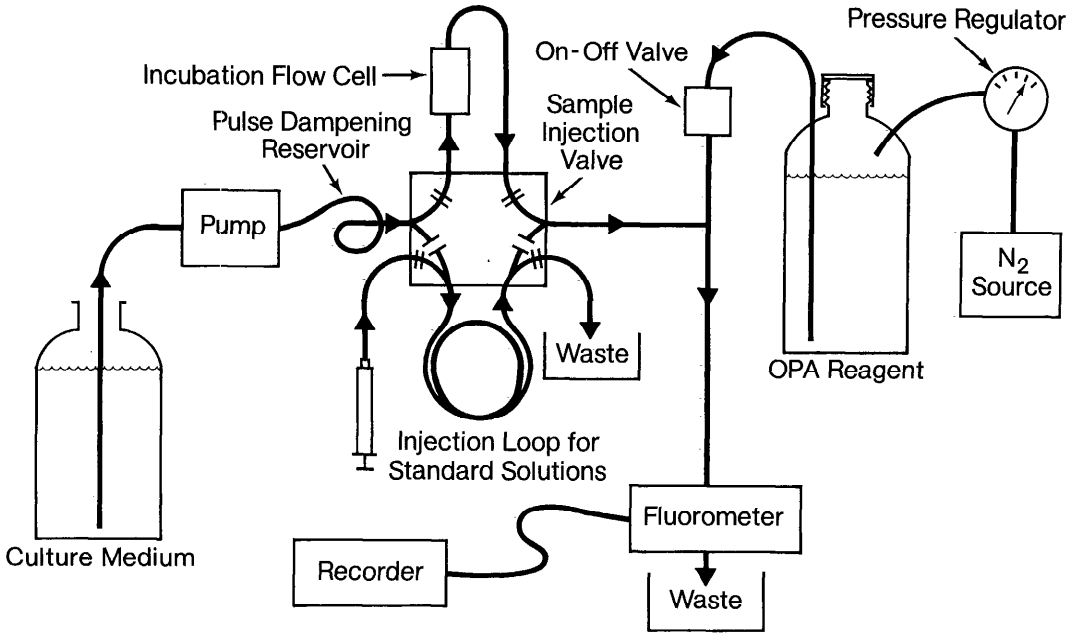

Fig. 2. Schematic of apparatus designed to measure kinetics of zooplankton nitrogen regeneration by method A.

To quantify nitrogen regeneration rates, we filled the injection loop with 5 μM NH_4Cl standard solution (freshly prepared in 2-ml volumes of the same batch of culture medium as the flow water) and switched the sample injection valve to divert the water flow through the loop. We observed a fluorescence plateau for the standard solution, followed by a blank baseline response after the standard solution had passed through the injection loop (Fig. 3).

Apparatus to separate ammonium and primary amines: Method B—Although method A provides a continuous record of PRN regeneration, it does not distinguish between ammonium and primary amines. Since OPA reaction products of primary amines show greater relative fluorescence than those of ammonium (e.g. Gardner and Miller 1980), the release of even small quantities of primary amines by zooplankters would cause an overestimation of PRN when expressed as ammonium. A semicontinuous system was assembled to fractionate and analyze ammonium and primary amines as separate discrete peaks (Fig. 4). For this method B technique, we directed incubation-flow-cell eluate into the sample loop (0.32 ml in 20-gauge Teflon tubing) of an ammonium analyzer for automatic separation of the two forms of nitrogen by cation exchange chromatography (Gardner 1978). A culture-medium bypass tube (30-gauge Teflon), attached with a T-fitting to the inlet side of the sample loop, provided an outlet for the culture flow water when we directed buffer flow through the sample loop. We elevated the outlet of this bypass tube (ca. 15 cm) so that the water would preferentially pass through the sample loop when the valve was open to incubation water flow.

At intervals of 10 min, we injected the contents of the sample loop into the ammonium analyzer by switching the sample valve to injection mode. After the buffer had pushed the sample out of the loop (ca. 2 min), we switched the valve back to buffer bypass mode to permit the incubation cell outflow to again pass into the sample loop. We analyzed a sample of incubation water equal to the sample

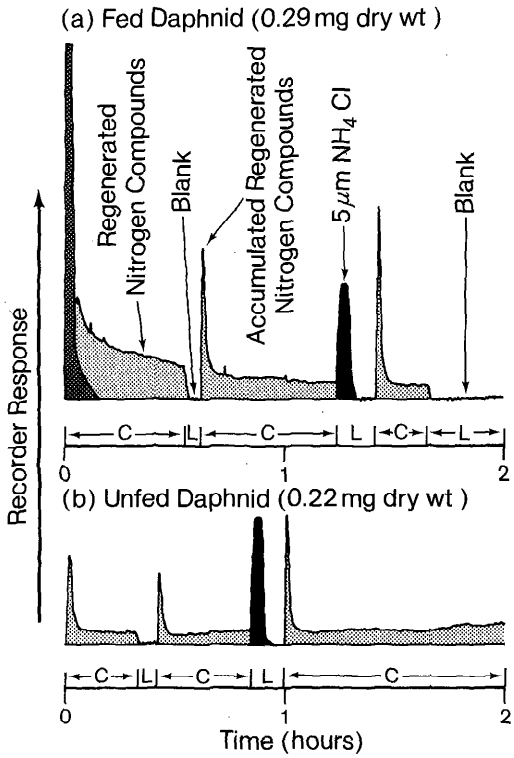

Fig. 3. Recorded traces of ammonium + primary amino nitrogen regenerated by individual fed and unfed *D. magna* vs. time (method A). Dark-shaded area under first peak represents response from *Daphnia* rearing-tank water (determined by a run on the same day without the daphnid). Light-shaded areas represent quantities of nitrogen compounds (primarily ammonium) released by each animal. Solid black areas show responses from 0.4 ml of 5 μM NH_4Cl standard solution. Regenerated nitrogen was determined with sampling valve (Fig. 2) directing flow through incubation cell (C), whereas blank and standard responses were determined with flow going through injection loop (L).

loop volume with each injection. To increase analytical response, we stopped cell flow for a discrete period (6.9 min) to allow nitrogen compounds to accumulate. The sample loop volume was sufficiently large (0.32 ml) so that the contents of the incubation cell could be transferred quantitatively into the loop by turning on the flow (0.1 ml·min^{-1}) for 3.1 min. We determined culture medium blanks by removing the flow cell and directing the culture medium flow into the sample loop for injection and analysis. To quantify results, we replaced the outlet tube of the flow cell with a syringe adapter, and a standard ammonium solution (5 μM NH_4Cl) made up in culture medium was drawn into the sample loop and analyzed.

Release rate measurements: Separation method B—After the fluorometer was warmed up, we directed buffer and reagent flows through the ammonium analyzer to begin operation (Gardner 1978). We placed the sample injection valve in the buffer bypass mode and added an animal to the incubation cell. We purged the flow cell and injection loop of preconditioning tank water by flowing culture medium past the animal for 1.5 min at a flow rate of 1.1 ml·min^{-1}. We then stopped pump B (Fig. 4) for a measured interval (6.9 min) to allow regenerated nitrogen to accumulate in the incubation cell. The flow rate setting of pump B was changed to 0.1 ml·min^{-1} and cell flow was activated for 3.1 min to transfer the nitrogen compounds accumulated over 10 min into the sample loop. After the pump was stopped, we injected the contents of the sample loop for automatic separation and analysis of ammonium and primary amines. We repeated the accumulation, transfer, and injection steps as desired for continued measurement of ammonium (or primary amines) released as a function of time. A representative recorder trace of results from successive 10-min accumulations is shown in Fig. 5. We did the above steps manually for our early experiments, but then we automated them by using a solvent programer (Beckman model 420) interfaced with a pneumatically operated sample valve. After the animal was removed at the end of an experiment, we analyzed blank culture medium and standard solutions.

We obtained ammonium release rates of fed animals by extrapolating the rate of change in release over the first two measured intervals back to the time of removal from food (e.g. time zero on Fig. 6a). After removing the animals from food, we measured release rates for at least 70 min.

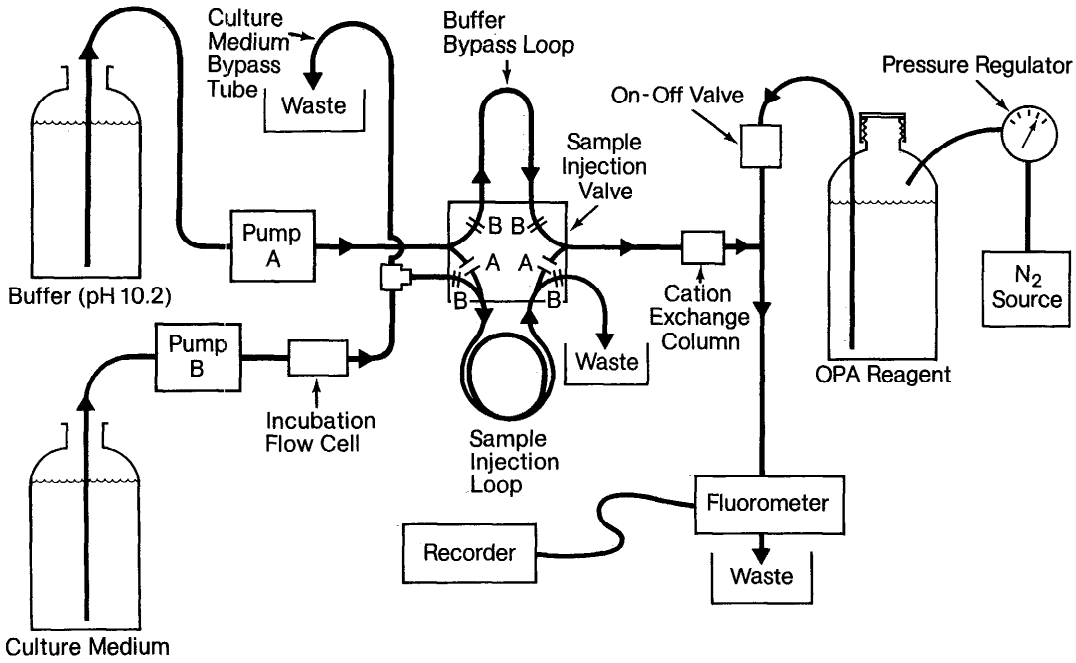

Fig. 4. Schematic of apparatus to measure ammonium release of individual zooplankters by method B.

Experimental animals—We got *D. magna* from Ann Arbor Biological Center (Ann Arbor, Mich.). A culture was kept in the laboratory for several weeks in an aerated tank (ca. 4 liter) of unfiltered Lake Michigan surface water, under combined natural and fluorescent light at room temperature (24°–26°C). Food supply was kept in excess by adding soy flour every day. The flour may have served directly as food or indirectly through the growth of bacteria or Protozoa in the tank. Animals reproduced successfully and usually had filled guts when examined. *Daphnia pulex,* supplied by J. T. Lehman, was kept for several days under similar conditions.

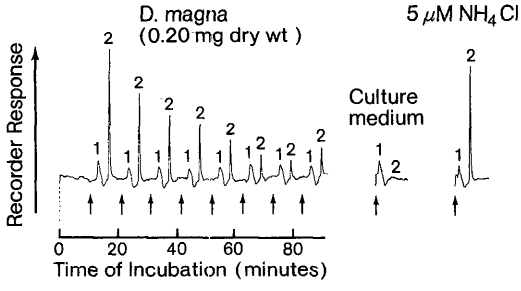

Fig. 5. Representative recorded trace of sequential ammonium analysis vs. time by method B. Arrows indicate injection times. Positions of 1 and 2 correspond to retention times of most primary amines and ammonium respectively.

Weight-specific release rates for *D. magna* were based on wet weight measurements converted to dry weights by a constant factor (dry wt : wet wt ± SE = 0.138 ± 0.005) obtained by weighing 12 individual animals in both states. Wet weights were determined by gently drying each animal with tissue (for ca. 3 min) and weighing it on a Sartorius 6-place balance (accuracy = ca. 1 μg). Animals were kept at 60°C in preweighed planchets for 24 h before dry weight measurements were taken. Dry weights were determined directly for *D. pulex*.

Results

Evaluation of incubation flow cell—We measured continuous PRN release by 17 fed *D. magna* for 70 min to evaluate the potential effect of the flow cell on release rates and to examine patterns of ni-

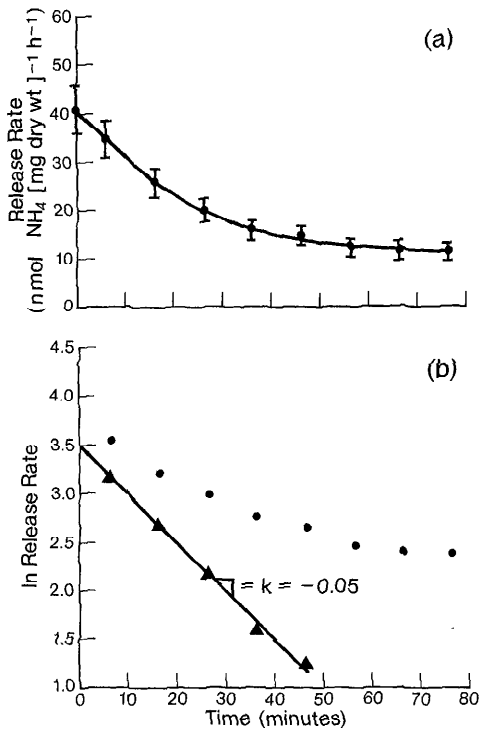

Fig. 6. a—Mean (± SE) ammonium release rates vs. time after removal from food for eight individual *D. magna* incubated for 80 min in flow cell. Zero-time rates were estimated for each animal by back-extrapolation from first two measured rates. b—Natural-log plot of mean ammonium release rates (●) and of difference between mean and steady state rates (▲) vs. time for data presented in panel a. Slope of line represents exponent of decreasing release rates.

trogen release after feeding. Release rates by recently fed animals were typically maximal immediately after the experiments began, decreased for 30–60 min, and then reached a steady state (e.g. Fig. 3a). PRN release rates at 10 min after flow past the animal began and at 70 min (values for steady state metabolic release) are given in Table 1. Rates were significantly lower after the first hour of incubation, when the effects of previous feeding were assumed to be substantially reduced.

We kept seven animals in 250 ml of *low-nutrient medium without food* for 3–5 h before examining PRN release to establish if the high release rates at the beginning of incubations were due to feeding or to experimental stress. These animals did not show elevated release rates during the early stages of incubation; mean release rates were relatively constant at 10 and 70 min (e.g. Fig. 3b) and not significantly different from the 70-min rates of the recently fed animals (Table 1). The mean ratio of 10-min release rate : 70-min release rate (± SE) was 1.2 ± 0.2 for the starved animals and 2.4 ± 0.3 for the prefed animals. We conclude that the elevated initial release rates were due mainly to feeding effects rather than to stress imposed by handling.

Table 1. Regeneration rates and SE of *o*-phthalaldehyde reactive nitrogen (PRN: ammonium + primary amines) by *D. magna* (0.2–0.4 mg dry wt) at 10 and 70 min after beginning of continuous measurement in incubation flow cell, nmol PRN as ammonium·(mg dry wt)$^{-1}$·h^{-1}. Significance of differences among means was tested by one-way ANOVA and pair-wise multiple comparison of means (Newman-Keuls-Hartley method: Snedecor and Cochran 1967).

Treatment before measurement	Replicates	10 min Mean	10 min SE	70 min Mean	70 min SE
Fed	17	47*	3	22	2
Unfed (3–5 h)	7	24	4	21	3

* $P < 0.001$.

Ammonium release rates for prefed D. magna—Ammonium release rates during eight successive 10-min intervals (method B) for eight animals immediately after each was removed from its food supply are shown in Fig. 6a. The rates for well fed animals were calculated by linearly extrapolating rates from the first two measured intervals for each animal back to zero time after removal from food. Well fed animals released ammonium at an estimated mean rate of 41 nmol ammonium·(mg dry wt)$^{-1}$·h^{-1} (SE = 5). As in the continuous kinetic measurements (method A), ammonium release rates decreased continually during the first hour after removal from food and then leveled off to a steady state of 11 nmol·(mg dry wt)$^{-1}$·h^{-1}(SE = 2). These steady state rates were similar to those for individual *D. magna* incubated for 4–6 h in 8 ml of

water [15 ± 2 nmol·(mg dry wt)$^{-1}$·h^{-1} when the wet wt : dry wt relationship given here is used: Gardner and Miller 1981] and resemble rates for 12–24-h incubations of *D. pulex* (Jacobson and Comita 1976). Since method B measures *accumulated* ammonium, it provides an order of magnitude greater sensitivity than method A and should be useful for examining the smaller planktonic crustaceans that usually predominate in lakes. We obtained ammonium release rates of 43 ± 5 nmol·(mg dry wt)$^{-1}$·h^{-1} (N = 6) for *D. pulex* prefed on a bacteria-soy flour mixture. These rates are similar to those of Lehman (1980) for animals (originating from the same culture) feeding on nutrient-deficient *Chlamydomonas reinhardtii*, 35.94 ± 4.70 nmol·(mg dry wt)$^{-1}$·h^{-1}, but were lower than rates he obtained for animals feeding on nutrient-sufficient *C. reinhardtii*, 82.72 ± 13.6 nmol·(mg dry wt)$^{-1}$·h^{-1}. The general similarity of our data for both *D. magna* and *D. pulex* with those for daphnids incubated in larger volumes of water suggests that incubation in the relatively small flow cell did not affect rates of nutrient release.

A comparison of results from the two methods (Table 1, Fig. 6a) suggests that the measurement of PRN by method A overestimated ammonium release, presumably because of fluorescence from primary amines. Although actual rates of amino acid release were slow, <1 nmol·(mg dry wt)$^{-1}$·h^{-1}, compared to rates for ammonium, the relative fluorescent response from primary amines was high and caused ammonium release rates to be overestimated by method A. Thus, method A (3-min resolution) is appropriate for differentiating continuous from pulsing modes of nutrient release, but method B is recommended for quantitative measurement of ammonium release.

Discussion

Mode of nitrogen regeneration by D. magna—Except for occasional peaks in recorder response probably due to incomplete mixing, we did not generally observe large pulses in concentration after the initial water surrounding the animal was removed from the cell (e.g. Fig. 3). (The infrequently observed peaks, about 1 per 90 min, represented <3% of total PRN released. A trough associated with each peak provided evidence for occasional incomplete mixing in the incubation flow cell.) Although our method does not accurately resolve pulses more frequent than the "sweep time" of the cell (ca. 3 min), large, less frequent pulses would be observed readily if they occurred in the recorded traces of nitrogen release. We thus conclude that ammonium release by *D. magna* is continuous rather than pulsed. Since similar results may be expected for all zooplankton unable to store excretory products, calculations of the extent and persistence of high-concentration nutrient microenvironments (cf. Jackson 1980) should logically include zooplankton nutrient release as a continuous process.

Effect of food on excretion rates of zooplankter ammonium—Our data agree with other evidence (Peters and Rigler 1973; Takahashi and Ikeda 1975; Lehman 1980) that traditional methods of long incubations in the absence of food significantly underestimate nutrient release rates of actively feeding animals. This may be caused in part by experimental designs that eliminate regeneration from phytoplankton cell damage and zooplankton defecation. Another reason for lower release rates by nonfeeding animals may be decreased release caused by deterioration in the quality of the food remaining in the guts.

Nitrogen release rates, measured continually or as individual 10-min accumulations, decreased with time during our experiments (Figs. 3a, 5 and 6). Similar decreasing rates of radiolabeled phosphorus release observed for labeled animals feeding actively on unlabeled food after their guts were purged of labeled food have been attributed to dilution of labeled nongut phosphorus by the unlabeled gut form (Peters and Rigler 1973). In contrast to these phosphorus experiments with guts cleared of isotope, the guts of our animals contained resid-

ual food that may have supplied nitrogen to exchangeable ammonium pools.

Nutrient release under our experimental conditions can be expressed as $E_t = E_m + E_f$, where total nutrient release (E_t) is the sum of a basal rate due to endogenous ammonium excretion (E_m) and a rate due to release from digested and metabolized material (E_f), in a manner analogous to that described for phosphorus (Peters and Rigler 1973; Lehman 1980) and carbon release (Lampert 1975). The two components of nutrient release can be separated graphically in a manner analogous to curve-splitting (e.g. Lean and Rigler 1974). We took E_m to be the steady state release rate approximately 80 min after food removal, 11 nmol·(mg dry wt)$^{-1}$·h^{-1} (Fig. 6a). Since $E_f = (E_t - E_m)$, the slope of the straight line resulting from a plot of $\ln(E_t - E_m)$ vs. time is equal to the exponent k relating E_f to time (t). Extrapolation of that line to the y-axis gives the value of E_f at time zero (E_f'). This analysis results in the following empirical equation relating excretion to time:

$$E_t = E_m + E_f' \exp(-kt). \qquad (1)$$

Data from *D. magna* in our experiments could be expressed with this equation as $E_t = 11 + 33 \exp(-0.05t)$ nmol·(mg dry wt)$^{-1}$·h^{-1} (Fig. 6b).

Analysis of the decreasing nutrient release rates in the above manner defines three important characteristics of excretion. First, the endogenous ammonium excretion rate (E_m) can be estimated as the measured steady state release rate if experiments are long enough (e.g. 80 min). Second, extrapolation of the data to zero time estimates total excretion ($E_m + E_f'$) including catabolism or digestive release from freshly ingested food. This can be obtained from linear extrapolation of the first two measured rates or by solution of Eq. 1 at $t = 0$. By the latter method, we obtained an excretion rate of 44 nmol·(mg dry wt)$^{-1}$·h^{-1} for *D. magna*, slightly higher than our linearly extrapolated rate of 41 (Fig. 6a). The third characteristic, k, defined by Eq. 1 estimates the rate of change in release rate after removal from food. Our observed decreasing rate was likely caused by a decrease in the pool size of exchangeable ammonium and represents the fraction of that compartment lost per unit time (Peters and Rigler 1973). Since this rate constant represents a balance between rates of pool inputs and releases, it may relate to the lability of the food remaining in the gut. Relative values of k should therefore be meaningful in studies concerning the effects of different food sources on excretion rates.

In summary, an incubation flow cell interfaced with high-performance analytical components makes it possible to measure nitrogen release with time immediately after zooplankters are removed from their food. We have used the kinetic data thus obtained to quantify the ammonium release of recently fed *D. magna* and *D. pulex* and to differentiate basal ammonium release from food-dependent release for *D. magna*. The incubation flow cell system can also be used to examine the excretion kinetics of other nutrients. For example, we have interfaced the flow cell with a modified Technicon AutoAnalyzer to monitor inorganic phosphorus release by daphnids.

References

CONOVER, R. J., AND P. MAYZAUD. 1976. Respiration and nitrogen excretion of neritic zooplankton in relation to potential food supply, p. 151–163. *In* European Mar. Biol. Symp., 10th, v. 2. Universa.

CORNER, E. D. S., C. B. COWEY, AND S. M. MARSHALL. 1965. On the nutrition and metabolism of zooplankton. 3. Nitrogen excretion by *Calanus*. J. Mar. Biol. Assoc. U.K. **45:** 429–442.

GARDNER, W. S. 1978. Microfluorometric method to measure ammonium in natural waters. Limnol. Oceanogr. **23:** 1069–1072.

———, AND W. H. MILLER III. 1980. Reverse-phase liquid chromatographic analysis of amino acids after reaction with o-Phthalaldehyde. Anal. Biochem. **101:** 61–65.

———, AND ———. 1981. Intracellular composition and net release rates of free amino acids in *Daphnia magna*. Can. J. Fish. Aquat. Sci. **38:** 157–162.

GELLER, W. 1975. Die Nahrungsaufnahme von *Daphnia pulex* in Abhangigkeit von der Futterkonzentration, der Temperatur, der Korpergrosse und dem Hungerzustand der Tiere. Arch. Hydrobiol. Suppl. 48, p. 47–107.

GOLDMAN, J. C., J. J. MCCARTHY, AND D. G. PEARCY. 1979. Growth rate influence on the chemical composition of phytoplankton in oceanic waters. Nature **279**: 210–215.

HARE, D. E. 1975. Amino acid composition by column chromatography, p. 204–231. *In* S. B. Needlemen [ed.], Protein sequence determination, 2nd revised ed. Springer.

HARGRAVE, B. T., AND G. H. GEEN. 1968. Phosphorus excretion by zooplankton. Limnol. Oceanogr. **13**: 332–342.

JACKSON, G. A. 1980. Phytoplankton growth and zooplankton grazing in oligotrophic oceans. Nature **284**: 439–441.

JACOBSON, T. R., AND G. W. COMITA. 1976. Ammonia-nitrogen excretion in *Daphnia pulex*. Hydrobiologia **51**(3): 195–200.

LAMPERT, W. 1975. A tracer study on the carbon turnover of *Daphnia pulex*. Proc. Int. Assoc. Theor. Appl. Limnol. **19**: 2913–2921.

———. 1977. Studies on the carbon balance of *Daphnia pulex* de Geer as related to environmental conditions. 2. The dependence of carbon assimilation on animal size, temperature, food concentration, and diet species. Arch. Hydrobiol. Suppl. 48, p. 310–335.

LEAN, D. R., AND F. H. RIGLER. 1974. A test of the hypothesis that abiotic phosphate complexing influences phosphorus kinetics in epilimnetic lake water. Limnol. Oceanogr. **19**: 784–788.

LEHMAN, J. T. 1980. Release and cycling of nutrients between planktonic algae and herbivores. Limnol. Oceanogr. **25**: 620–632.

MARSHALL, S. M., AND A. P. ORR. 1961. On the biology of *Calanus finmarchicus*. 12. The phosphorus cycle: Excretion, egg production, autolysis. J. Mar. Biol. Assoc. U.K. **41**: 463–488.

PETERS, R. H., AND F. H. RIGLER. 1973. Phosphorus release by *Daphnia*. Limnol. Oceanogr. **18**: 821–839.

SCHINDLER, D. W. 1968. Feeding, assimilation, and respiration rates of *Daphnia magna* under various environmental conditions and their relation to production estimates. J. Anim. Ecol. **37**: 369–385.

SNEDECOR, G. W., AND W. G. COCHRAN. 1967. Statistical methods, 6th ed. Iowa State.

TAKAHASHI, M., AND T. IKEDA. 1975. Excretion of ammonia and inorganic phosphorus by *Euphausia pacifica* and *Metridia pacifica* at different concentrations of phytoplankton. J. Fish Res. Bd. Can. **32**: 2189–2195.

Submitted: 1 December 1980
Accepted: 5 March 1981