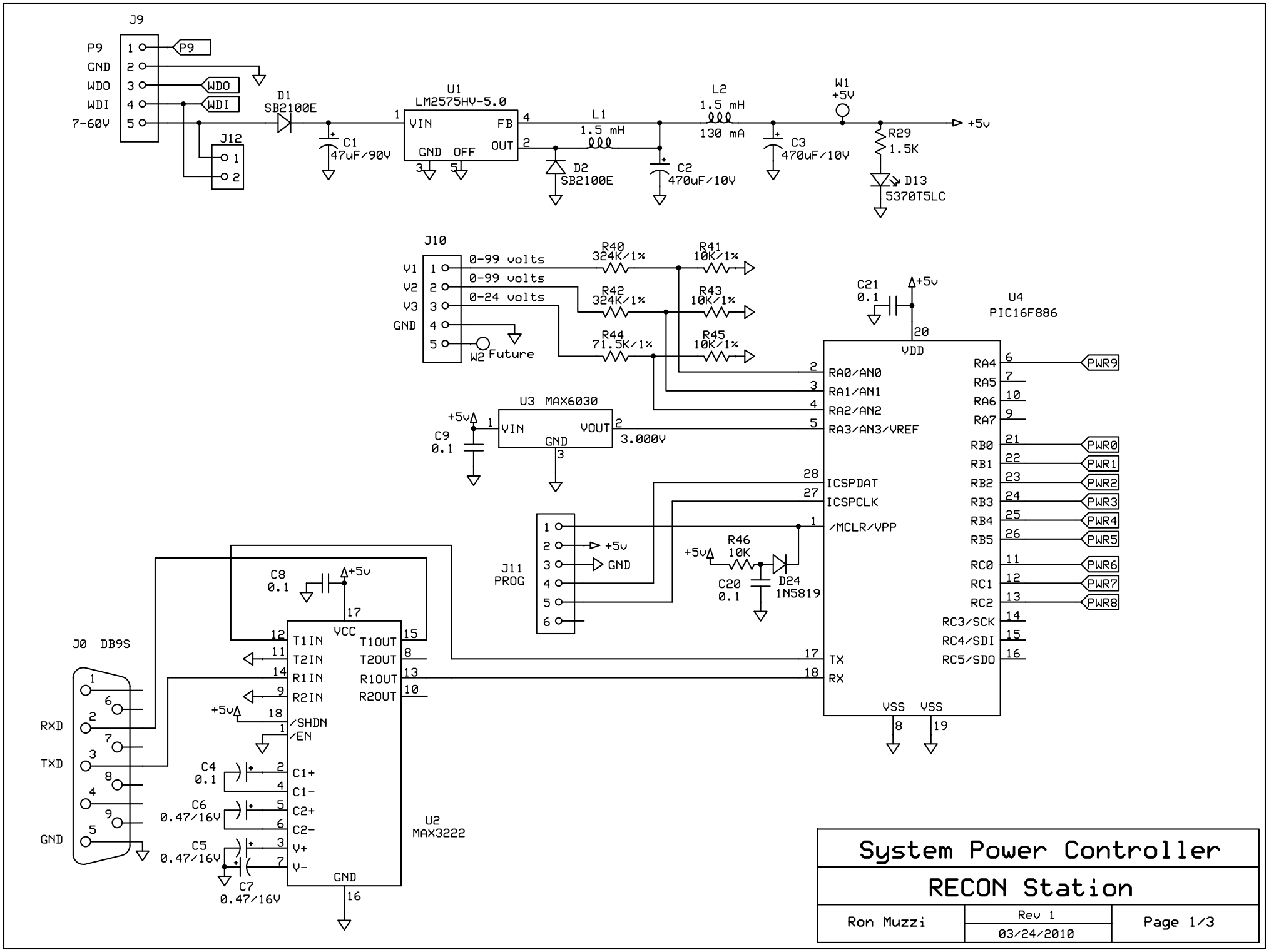

System Power Controller

RECON Station

Ron Muzzi	Rev 1 03/24/2010	Page 1/3

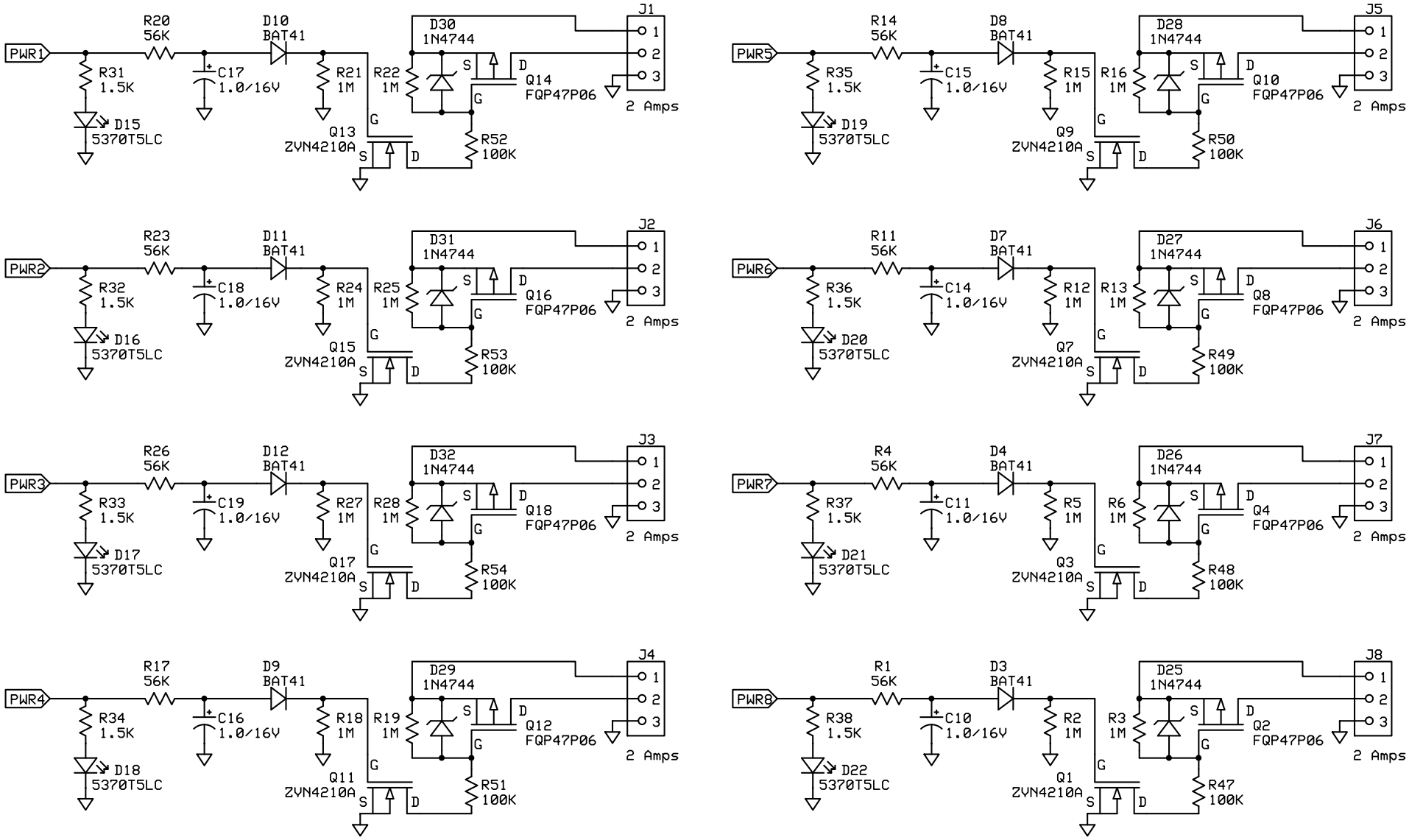

System Power Controller		
RECON Station		
Ron Muzzi	Rev 1 03/24/2010	Page 2/3

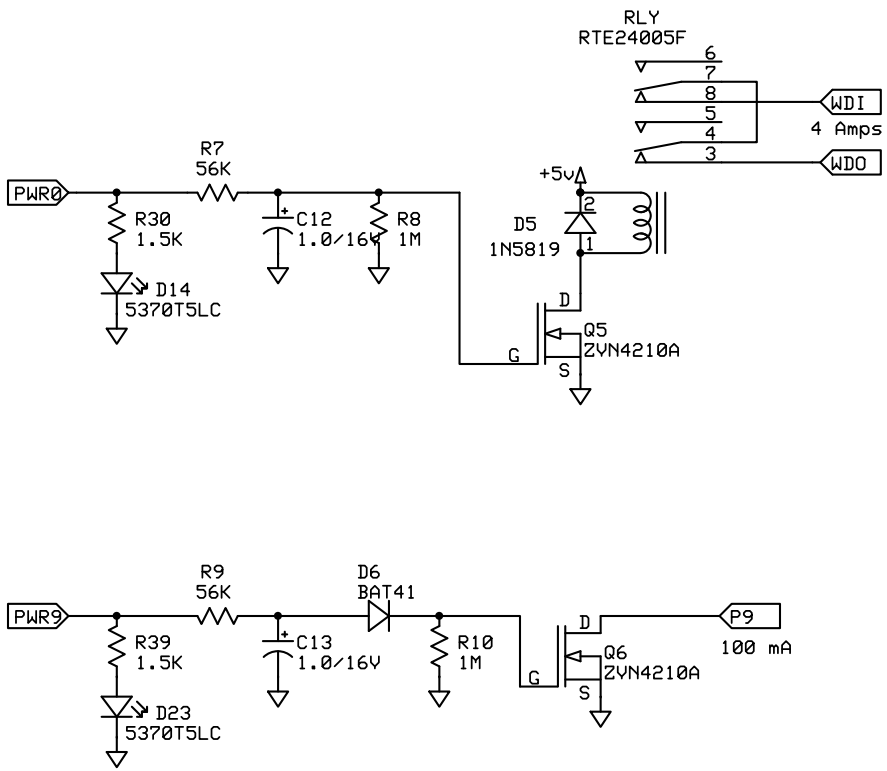

System Power Controller		
RECON Station		
Ron Muzzi	Rev 1 03/24/2010	Page 3/3